Pocket-size CdZnTe gamma-ray spectrometer

Paul N. Luke, Mark Amman, Julie S. Lee, Chinh Q. Vu

***Abstract*--A pocket-size gamma-ray spectrometer has been developed. It uses a large volume (2 cm^3) CdZnTe coplanar-grid detector to achieve good detection efficiency and energy resolution. The spectrometer is completely self-contained. It includes pulse processing electronics, multi-channel analyzer, data storage, LCD display, keypads, USB interface, and rechargeable battery. Custom software was created for spectrum acquisition, storage, and display. The power consumption of the spectrometer is 120 mW when active, allowing 2 days of continuous operation on a full battery charge.**

I. Introduction

THERE is a need for portable gamma-ray spectrometers in nuclear non-proliferation, homeland security, intelligence, custom inspection, as well as a variety of scientific and industrial applications. In many cases, it is desirable to have an instrument that is highly compact and consumes little power so that it can be conveniently operated in the field. Obviously, it is also desirable to have the best possible energy resolution and efficiency. Spectrometers based on scintillators such as NaI and CsI are available, but they have poor energy resolution, which is typically 5%-10% FWHM at 662 keV. Ge detectors can provide excellent energy resolution (~0.2%) and good efficiency, but they require cooling to near liquid-nitrogen temperatures. Recently, portable Ge spectrometers that use mechanical cooling have been developed [1][2], which eliminates the need for liquid nitrogen. However, they are relatively bulky and heavy due to their mechanical complexity and their high power consumption that necessitates a large battery size to maintain a reasonable operating time.

Gamma-ray spectrometers that use room-temperature, high-Z semiconductor detectors could in principle provide the desired combination of small size, low power consumption, and good spectral performance. A number of spectrometers with room temperature semiconductor detectors have been developed and commercially produced [3]. Most of them make use of CdTe or CdZnTe detectors. However, due to the poor hole collection of the semiconductor materials, detectors with small volumes (< 1 cm^3) are commonly employed to maintain acceptable spectral performance. To increase efficiency, some spectrometers employ an array of small detector elements to increase the total detector volume [4]. However, simply summing the spectra from multiple detector elements will not improve the intrinsic photopeak efficiency or the peak-to-Compton ratio over that of an individual detector element. For high energy gamma rays, a large-volume detector with a single readout for the full volume will have substantially better photopeak efficiency and peak-to-Compton ratio than multiple small detectors of equivalent total volume. This is because multiple-site gamma-ray interactions have a higher probability of being fully captured in a large volume device than individual small detectors. Coincidence summing of signals from the individual detectors could in principle be used to achieve higher photopeak efficiency [5] but that would involve complex electronics, and the summing of noise from multiple detectors will degrade performance.

One method that successfully achieved high energy resolution from large-volume CdZnTe detectors (>2 cm^3) is the 3-D position-sensitive detector technology [6]. In this method, the detector is electronically segmented into a large number of voxels. Signals from each voxel are corrected for carrier trapping effects. Coincident summing of multi-site interactions is used in this case to maintain the photopeak efficiency of the full-volume detector. This method requires complex signal processing electronics, and likely also requires significant power to operate, which tends to increase the size and weight of the system. To date, there has been no published report on a self-contained hand-held spectrometer based on this technique.

The coplanar-grid (CPG) technique on the other hand can provide good energy resolution and high efficiency from a large volume detector while at the same time requiring only very simple electronics to operate [7], making it possible to produce compact, low-power detector systems with good spectral performance. A hand-held spectrometer using a CPG CdZnTe detector has been developed previously [8]. This system also includes a neutron detector and radioisotope identification software. However, we believe the size and power consumption of the spectrometer can be further reduced, which would make it more flexible and convenient to use.

Significantly smaller spectrometers using CPG detectors are possible by utilizing a more compact circuit design, miniaturized components, and low-power design methodology. By properly selecting large-volume CdZnTe crystals, high energy-resolution and efficiency can be achieved. Based on these approaches, we have developed a high-performance pocket-size gamma-ray spectrometer utilizing a CdZnTe CPG

Manuscript received November 15, 2004. This work was supported by the office of NA-22, NNSA, U.S. Department of Energy under Contract No. DE-AC03-76SF00098.

P. N. Luke, M. Amman, J. S. Lee and C. Q. Vu are with the Lawrence Berkeley National Laboratory, Berkeley, CA 94720 USA (telephone: 510-486-4962, e-mail: pnluke@lbl.gov).

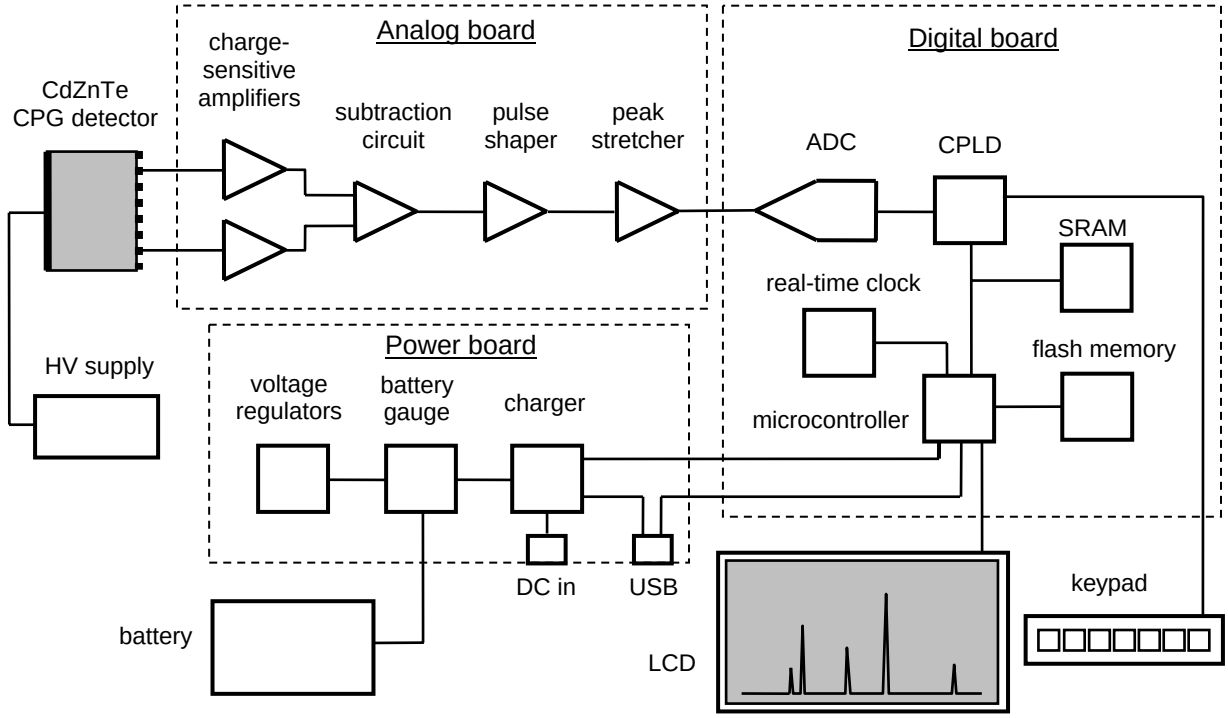

Fig. 1. Simplified block diagram of the spectrometer.

detector with a nominal volume of volume 2.3 cm^3 (15 mm X 15 mm X 10 mm). The system is capable of acquiring and storing gamma-ray spectra under control of the user or a personal computer. Other functions such as automatic radioisotope identification or wireless communication, which are demanded in some applications, have yet to be implemented. The main purpose of this work is to demonstrate that a very low power and compact spectrometer unit can be produced. Other functionalities can be added depending on specific operational requirements.

II. DESIGN

The major design consideration for the spectrometer is low power consumption. This is the key to achieving a compact instrument package since it would allow the use of a small battery while still achieving a long battery life. To this end, low-power electronic components are chosen for use in the spectrometer, and the circuit design is simplified as much as possible without compromising the performance of the spectrometer as intended for field applications. The design makes use of commercial integrated circuits and discrete electronic components, which keeps the cost of electronics low and allows for easy modification and upgrade as needed.

A simplified block diagram of the spectrometer electronics is shown in Fig. 1. The CdZnTe CPG detector is read out by 2 charge-sensitive preamplifiers, followed by a signal subtraction circuit. The differential gain adjustment in the subtraction circuit provides correction for electron trapping effects. This simple adjustment allows optimal performance to be achieved for materials with different levels of electron trapping. The subtracted signals are then passed to a 4th-order pseudo-gaussian pulse shaper, which has a peaking time of 3 μs. The shaped pulses then go through a passive baseline restore circuit and a pulse stretcher. The peak of each pulse is held by the peak stretcher and fed to a 16-bit successive approximation ADC (Maxim MAX1165) for digitization. The data from the ADC is read by the CPLD (Xilinx XC2C384TQ144), which performs the histogramming function. Only 12-bits of data from the ADC are utilized, effectively averaging every 4 data bits to reduce differential non-linearity and results in a 4096-channel spectrum. The spectrum is accumulated in a SRAM (128 KB). After acquisition, the spectrum can be transferred to a flash memory (2 MB) for storage and subsequent retrieval. Up to 90 spectra can be stored onboard. The gain of the system is adjusted to approximately 0.75 keV per channel, giving a full-scale energy of 3 MeV.

A microcontroller (Renesas HD64F2239) provides control, housekeeping, interface and display functions. A real-time clock provides date and time information. Acquired spectrum and other information are displayed on an LCD. User interface is achieved through a simple membrane key pad. Interface with a personal computer is made via a USB port.

The power for the spectrometer is supplied by a 1.8 A-hr capacity lithium-ion rechargeable battery. A number of switching and linear voltage regulators provide the necessary

voltages for the analog and digital electronics. A charging circuit allows the battery to be recharged through the USB port or from an external DC supply (e.g., an AC adaptor). A battery "gas gauge" circuit provides information on the remaining battery charge, which is displayed on the LCD. A low-power high-voltage supply generates the bias voltage for the detector. The grid bias for the detector is derived from the bias voltage through a voltage divider.

III. Prototype

A prototype spectrometer has been built. A 14.8 mm X 14.7 mm X 9.2 mm CdZnTe CPG detector is used in the spectrometer for initial tests. It is secured inside a Lexan holder using silicone adhesive, which also protects the detector from shock and vibration (Fig. 2). The detector has an edge-effect-compensated grid electrode design, with a strip pitch of 0.5 mm [9]. The CdZnTe crystal was selected to have a low concentration of large inclusions (>20 microns). This selection criterion was developed based on previous studies on the effects of inclusions on the energy resolution of CPG detectors [10]. The detector operates at -1200 V bias in the spectrometer.

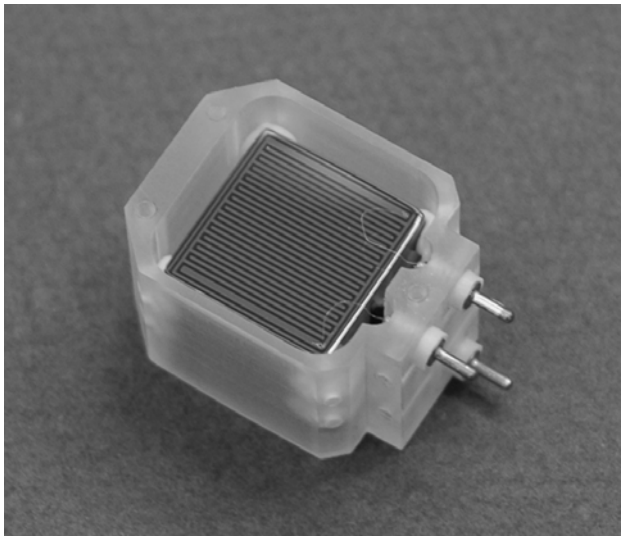

Fig. 2 CdZnTe CPG detector in Lexan mount.

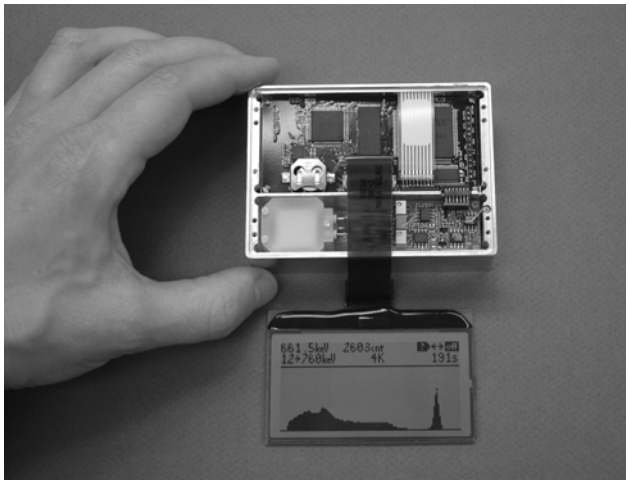

Fig. 3. Inside view of the spectrometer. The digital board is at the top; the detector and the analog board are at the bottom. The power supply board and the battery is underneath the digital board; the HV supply is underneath the analog board.

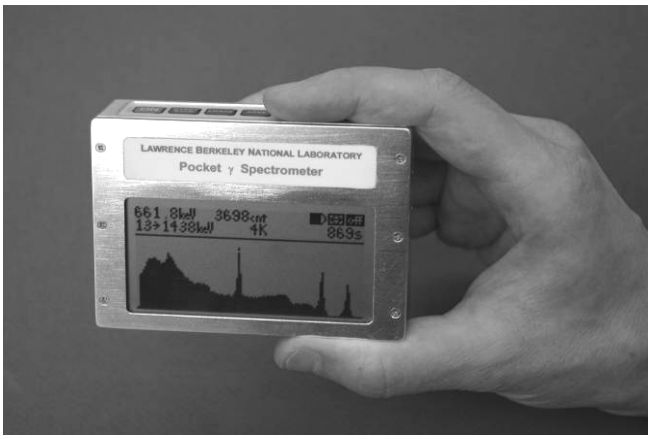

Fig. 4. The completed spectrometer.

Fig. 5. The display of the spectrometer in spectroscopy mode. During acquisition the spectrum is updated every 2 s. The spectrum can be scaled and zoomed manually. Cursor readings in keV and counts, as well as elapsed time and battery charge status are displayed.

The electronics of the spectrometer is assembled on 3 printed-circuit boards, as outlined in Fig. 1, using surface-mount electronic components. The circuit boards, together with the detector, high-voltage supply and battery are assembled inside an aluminum enclosure, as shown in Fig. 3.

The completed spectrometer is shown in Fig. 4. The overall size of the spectrometer is 3.46" X 2.54" X 1.05" (8.8 cm X 6.5 cm X 2.7 cm). It weighs 220 gm. The power consumption during acquisition is measured to be 120 mW, which permits 48 hours of continuous operation from the battery on a full charge. User control of the spectrometer is made via a 7-key membrane switch located on the top side panel of the spectrometer. A soft-key allows multiple functions to be

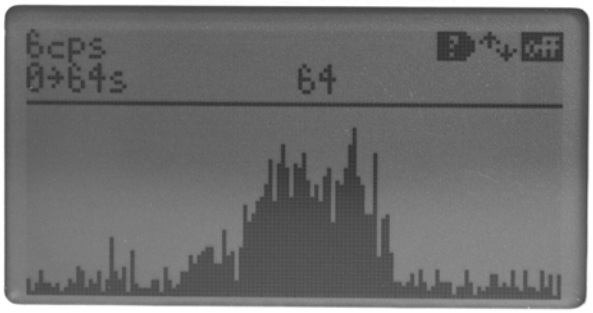

Fig. 6. The display of the spectrometer in counting mode. During counting, the count rate is shown in a scrolling display. The transient increase in count rate shown here is the result of moving a source past the spectrometer.

accessed using the 2 arrow keys, such as horizontal and vertical axis scaling, cursor movement, and other instrument control functions.

Fig. 5 shows the display of the spectrometer during spectrum acquisition. The spectrum is displayed and updated in real time. The displayed spectrum's energy range and cursor location is indicated in keV. The vertical scale (counts) is also displayed. The display can be zoomed and scaled manually to show a portion of the spectrum. Also displayed is the elapsed time. An acquired spectrum can be saved in flash memory, along with date and time information.

The spectrometer can also operate in counting mode, where a scrolling display of the count rate is shown (Fig. 6). This allows the location of a source to be easily identified by scanning the spectrometer across an area.

The spectrometer can interface with a computer via the USB port. This allows the spectrometer to be controlled by the computer, and data (spectra) to be downloaded to the computer for analysis and archiving. The microcontroller in the spectrometer can also be re-programmed via the USB. This allows for modification and upgrade of the software as needed.

The measured spectral performance of the spectrometer at 662 keV is as follows:

- FWHM: 18.4 keV (2.78%)
- FWTM: 36.1 keV (5.46%)
- FWTM/FWHM: 1.97
- Intrinsic photopeak efficiency: 7.1%
- Noise: 10.9 keV FWHM

The measured energy resolution is the same as that obtained from the same detector using standard laboratory electronics. The FWTM (full width at tenth maximum) to FWHM (full width at half maximum) ratio provides a measure of the spectral peak shape, and is a commonly used specification for Ge detectors. The ratio is equal to 1.82 for an ideal Gaussian peak shape. The measured ratio of 1.97 means the peak shape is quite close to Gaussian and there is no substantial tailing or other distortions in the spectral line shape.

The "intrinsic photopeak efficiency" is the fraction of gamma ray photons entering the detector that is detected within the photopeak. It was measured using a ^{137}Cs source with known activity and located at 25 cm from the detector's entrance surface (cathode) to approximate parallel-beam geometry. Based on Monte Carlo simulation, the fraction of gamma-ray photons that are fully absorbed in a 15 mm X 15 mm X 10 mm CdZnTe crystal is 8.5%. Given the smaller thickness of the detector (9.2 mm) and the expected incomplete collection layer of ~0.5 mm next to the coplanar-grid electrode surface, the measured efficiency of 7.1% is consistent with simulation, and it indicates that essentially full-volume efficiency is obtained from the detector.

The noise of the system was measured by injecting pulses from an external pulser through a test capacitor to the input of the one of the preamplifiers. The noise levels were 10.9 keV FWHM with the detector connected and biased, 7.6 keV FWHM with the detector unbiased, and 4.0 keV FWHM with the detector removed.

The count rate performance was measured using 662 keV gamma rays from a ^{137}Cs source. The energy resolution was 18.2 keV FWHM at 500 counts/s and 18.9 keV FWHM at 5000 counts/s. A peak shift of 0.5% was observed when the count rate was increased from 500 counts/s to 5000 counts/s. The sensitivity of the resolution and peak position to count rate is attributed to the use of a passive baseline restorer. Using an active restorer would provide a more stable response.

IV. Conclusion

A pocket size gamma-ray spectrometer has been developed. The spectrometer has a very low power consumption of 120 mW, which allows 48 hours of continuous operation on a full battery charge. A 2-cm^3 CdZnTe CPG detector is employed, providing a combination of high detection efficiency and good energy resolution that is heretofore unavailable in such a compact instrument. The size and power consumption of this system is ~3-10 times smaller than those of other existing hand-held spectrometer systems.

The energy resolution achieved with the present detector is modest, and it is mainly limited by material non-uniformity and detector noise. Although the material has been selected for good uniformity, it is by no means perfect. The detector also has a relatively high noise level. This not only contributed directly to the broadening of the photopeak, but also prevented us from applying a higher bias voltage, which would help reduce the effect of non-uniformity and improve performance. In a laboratory test with the same detector cooled to 0 °C, a resolution of 1.8 % FWHM was obtained, due to a lower noise level (7.7 keV FWHM) and an increase in bias voltage from 1200 V to 1700 V. This implies that if the electrodes of the detector can be improved to reduce leakage-current noise [11]

and allow higher operating bias, similar performance will be possible without cooling.

We have acquired, at different times, a total of 3 crystals with the nominal size of 15 mm X 15 mm X 10 mm, including the one reported above. The crystals were selected based on our screening method as described earlier. All 3 detectors fabricated from the crystals showed similar performance at room temperature and similar improvements upon cooling. This indicates that the material screening method we employ is effective, and if such a screening process is integrated into the crystal manufacturing and development process, the yield of high-quality detector materials would become sufficiently high to enable routine production of such detectors. This would also lower the cost of the detector, which dominates the cost of producing the spectrometer.

V. References

[1] J. A. Becker, C. P. Cork, L. Fabris, N. W. Madden, "Portable, low-power, mechanically cooled Ge spectrometer," *Nucl. Instrum. Methods*, vol. A 505, pp.167-9, 2003.

[2] http://www.ortec-online.com/pdf/detex.pdf

[3] See for example: http://www.xrfcorp.com/products/ics-4000.html, http://www.dtectsystems.com/dtectdocs/rad-ID%20specs.pdf, http://www.saic.com/products/security/gr-135/.

[4] F. P. Doty, C. L. Lingren, B. A. Apotovsky, J. Brunsch, J. F. Butler, T. Collins, R. L. Conwell, S. Friesenhahn, J. Gormley, B. Pi, S. Zhao, F. L. Augustine, B. A. Bennett, E. Cross, R. B. James, "Multichannel CdZnTe gamma ray spectrometer," *Nucl. Instrum. Methods*, vol. A 422, pp.185-9, 1999.

[5] R. Redus, A. Huber, J. Pantazis, T. Pantazis, T. Takahashi, S. Woolf, "Multielement CdTe Stack Detectors for Gamma-Ray Spectroscopy," *IEEE Trans. Nucl. Sci.*, vol. 51, no. 5, pp.2386-94, 2004.

[6] F. Zhang, Z. He, D. Xu, G. F. Knoll, D. K. Wehe, J. E. Berry, "Improved resolution for 3-D position sensitive CdZnTe spectrometers," *IEEE Trans. Nucl. Sci.*, vol.51, no.5, pp.2427-31, 2004.

[7] P. N. Luke, "Unipolar Charge Sensing with Coplanar Electrodes -- Application to Semiconductor Detectors," *IEEE Trans. Nucl. Sci.*, vol. 42, pp. 207-213, 1995.

[8] http://www.lanl.gov/news/pdf/Palm_CZTFact.pdf

[9] P. N. Luke, M. Amman, J. S. Lee, B. A. Ludewigt, H. Yaver, "A CdZnTe coplanar-grid detector array for environmental remediation," *Nucl. Instrum. Methods*, vol. A 458, no.1-2, pp.319-24, 2001.

[10] M. Amman, J. S. Lee, P. N. Luke, "Electron trapping nonuniformity in high-pressure-Bridgman-grown CdZnTe," *J. Appl. Phys.*, vol.92, no.6, pp.3198-3206, 2002.

[11] P. N. Luke, J. S. Lee, M. Amman, K. M. Yu, "Noise reduction in CdZnTe coplanar-grid detectors," *IEEE Trans. Nucl. Sci.*, vol. 49, no. 4, pp. 1950-3, 2002.